energy
efficient
ventilation

www.ostberg.com

CK 315 D1 EC

- Duct fan with circular connections.
- Proven performance and reliability.
- Compact with high capacity and efficiency.
- Low sound levels.
- Impeller with backward curved blades.
- The external rotor motor has maintenance-free sealed ball-bearings and is very energy efficient.
- Speed controlling can be done with the built-in potentiometer, 0-10 V alt. external control.
- Integrated motor protection.
- Junction box has enclosure class IP 54.
- Fan housing is manufactured from galvanized sheet steel.
- The fan is intended to be installed in a duct system.
- A duct connected fan can be installed outside or in damp environments.
- Easy installation in any position

DIAGRAMS

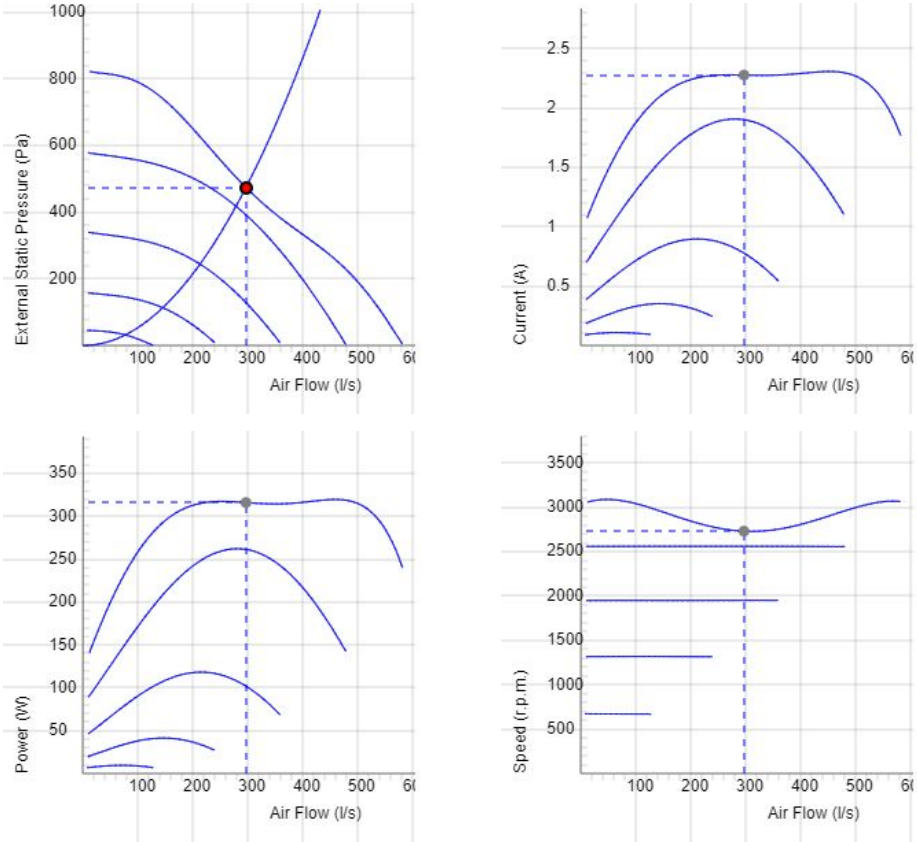

Data

Air Flow (l/s)	External static pressure (Pa)	Power (W)	Speed (r.p.m.)	Current (A)	Voltage (V)
297	474	316	2731	2.28	10

DIAGRAMS

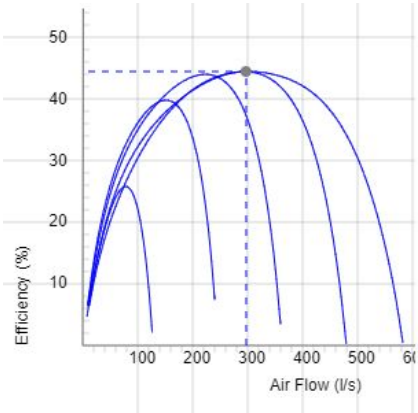

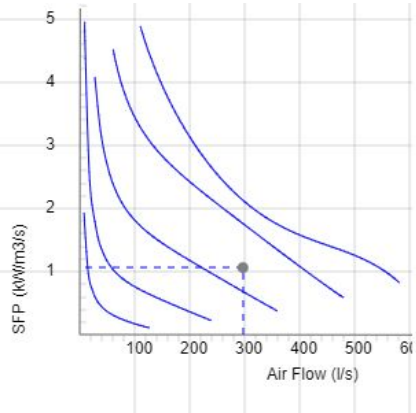

DATA

Efficiency (%) 44.5
SFP (kW/m3/s) 1.06

SOUND DATA

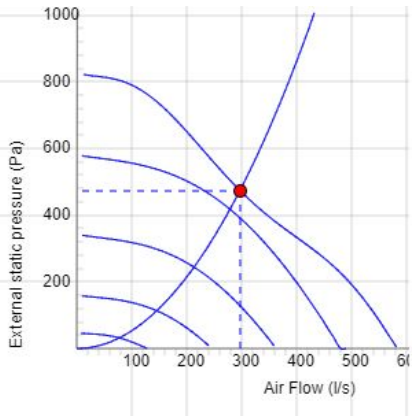

	Tot	63	125	250	500	1k	2k	4k	8k
Inlet Lw dB(A)	78	63	61	69	68	68	73	69	68
Outlet Lw dB(A)	80	63	62	68	74	72	75	68	66
Surrounding Lw dB(A)	57	28	41	46	50	50	53	46	37
Surrounding Lp dB (A) 20m² Sabine, hemispherical 3m	50								

Data - SOUND

Air Flow (l/s)	External static pressure (Pa)	Power (W)	Speed (r.p.m.)	Current (A)	Efficiency (%)	SFP (kW/m3/s)	Voltage (V)
297	474	316	2731	2.28	44.5	1.06	10

TECHNICAL DATA

Parameter	CK 315 D1 EC-y1 7001281 Value	Unit
Voltage	230	V
Phase	1	~
Frequency	50/60	Hz
Power	319	W
Current	2.3	A
Speed	2880	r.p.m.
Max. temperature of transported air	60	°C
Sound pressure level at 3 m	49	dB(A)
Weight	5.7	kg
Enclosure class	44	IP
Insulation class, motor	F	
Duct connection	315	mm
Max. flow	584	l/s
Max. pressure	837	Pa
Voltage range	200-277	V

PRODUCT INFORMATION SHEET

Parameter	Value	Unit
(a) Manufacturer	Östberg	-
(b) Model code	CK 315 D1 EC	-
(c) Declared type	NRVU / UVU	-
(d) Type of drive	Variable speed drive	-
(e) Type of HRS	N/A	-
(f) Thermal efficiency	N/A	%
(g) Nominal flow rate	0.364	m^3/s
(h) Effective power input	0.318	kW
(i) SFP int	N/A	$W/(m^3/s)$
(j) Face velocity	4.7	m/s
(k) Nominal external pressure	410	Pa
(l) Internal pressure drop	N/A	Pa
(n) Static efficiency	46.8	%
(o) External (and internal) leakage rate	0.18 (N/A)	%
(p) Filter classification	N/A	%
(q) Visual filter warning	N/A	-
(r) Sound power level	56	dB LwA
(s) Disassembly instructions	fsp.ostberg.com	-

WIRING DIAGRAM

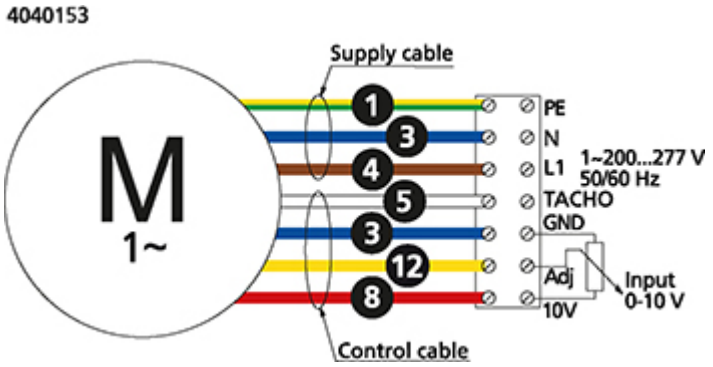

M = Fan Motor
M1 = Fan Motor
M2 = Fan Motor
M3 = Rotor Motor
1 = Yellow/Green
2 = Black
3 = Blue
4 = Brown
5 = White
6 = Orange
7 = Grey
8 = Red
9 = Green
10 = Violet
11 = Quick switch
12 = Yellow

DIMENSIONS

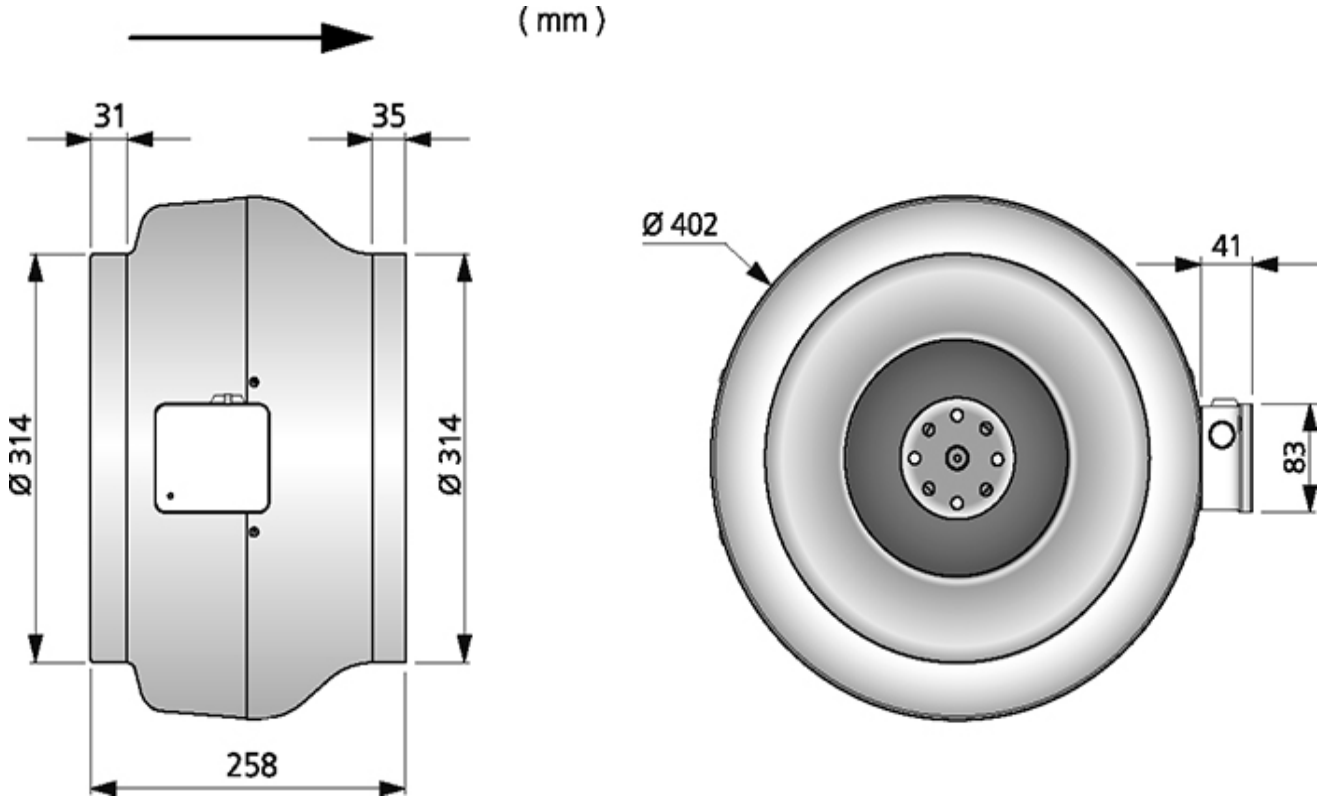

ACCESSORIES

Electrical accessories

Speed controller MS EC

Controller IQ-Reg EC

Pressure regulator CALAIR-PR-230V

Pressure regulator FKP-R

Mechanical accessories

Mounting bracket Kit MB

Mounting clamp MK 315

Filterbox FLK 315

Filterbox FLF 315

Safety grille BSV 315

Back draught shutter RSK 315

Louvre YG 315

Louvre shutter VK 315

Silencer LDC 315